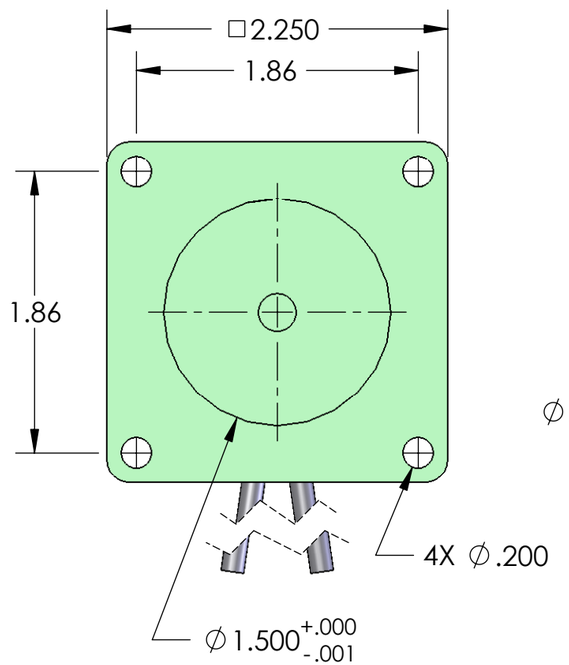

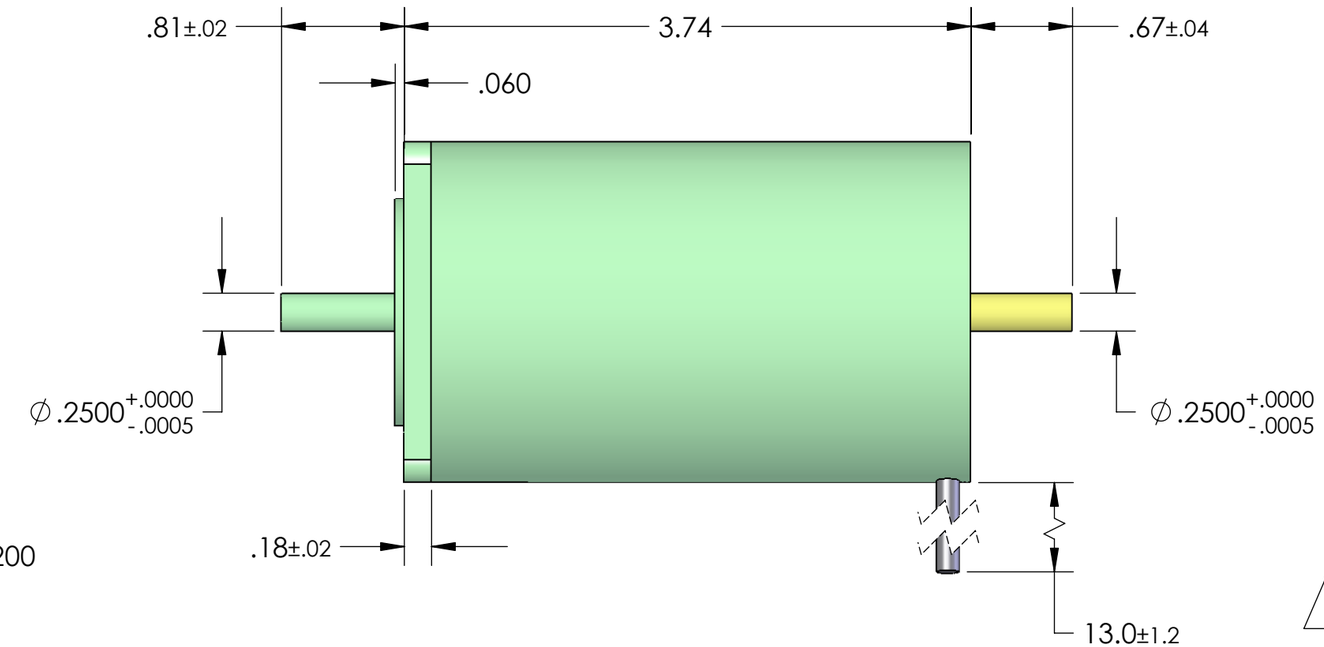

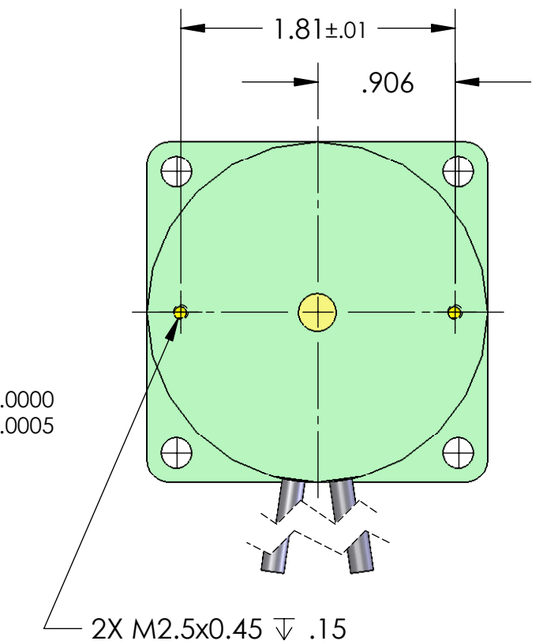

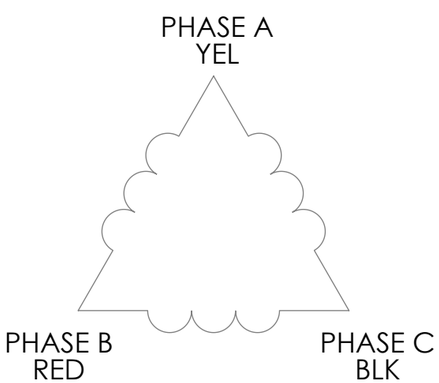

WIRE COLOR	DESCRIPTION
RED	HALL SUPPLY
BLUE	HALL A
GREEN	HALL B
WHITE	HALL C
BLACK	HALL GROUND
YELLOW	PHASE A
RED	PHASE B
BLACK	PHASE C

PROPRIETARY AND CONFIDENTIAL

THE INFORMATION CONTAINED IN THIS DRAWING IS THE SOLE PROPERTY OF USAUTOMATION ANY REPRODUCTION IN PART OR AS A WHOLE WITHOUT THE WRITTEN PERMISSION OF USAUTOMATION IS PROHIBITED.

NEXT ASSY	USED ON
APPLICATION	

UNLESS OTHERWISE SPECIFIED:

DIMENSIONS ARE IN INCHES
TOLERANCES:
FRACTIONAL ±1/32
ANGULAR: MACH ±.5° BEND ±1°
TWO PLACE DECIMAL ±.03
THREE PLACE DECIMAL ±.005

INTERPRET GEOMETRIC TOLERANCING PER:

MATERIAL

FINISH

DO NOT SCALE DRAWING

	NAME	DATE
DRAWN		
CHECKED		
ENG APPR.		
MFG APPR.		
Q.A.		

COMMENTS:

USAutomation
Solutions in Linear Motion
23011 MOULTON PARKWAY, SUITE J2
LAGUNA HILLS, CA 92653
949-588-0581

TITLE: USB234D-XXXX

SIZE B | DWG. NO. | REV

SCALE: 1:1 | WEIGHT: | SHEET 1 OF 1